REVISIONS					
REV.	ECN#	ZONE	DESCRIPTION	CHANGED BY/DATE	APPROVED BY/DATE
F01	ECO-18-00263		RELEASE	M.L. 25JUN18	E.R. 25JUN18

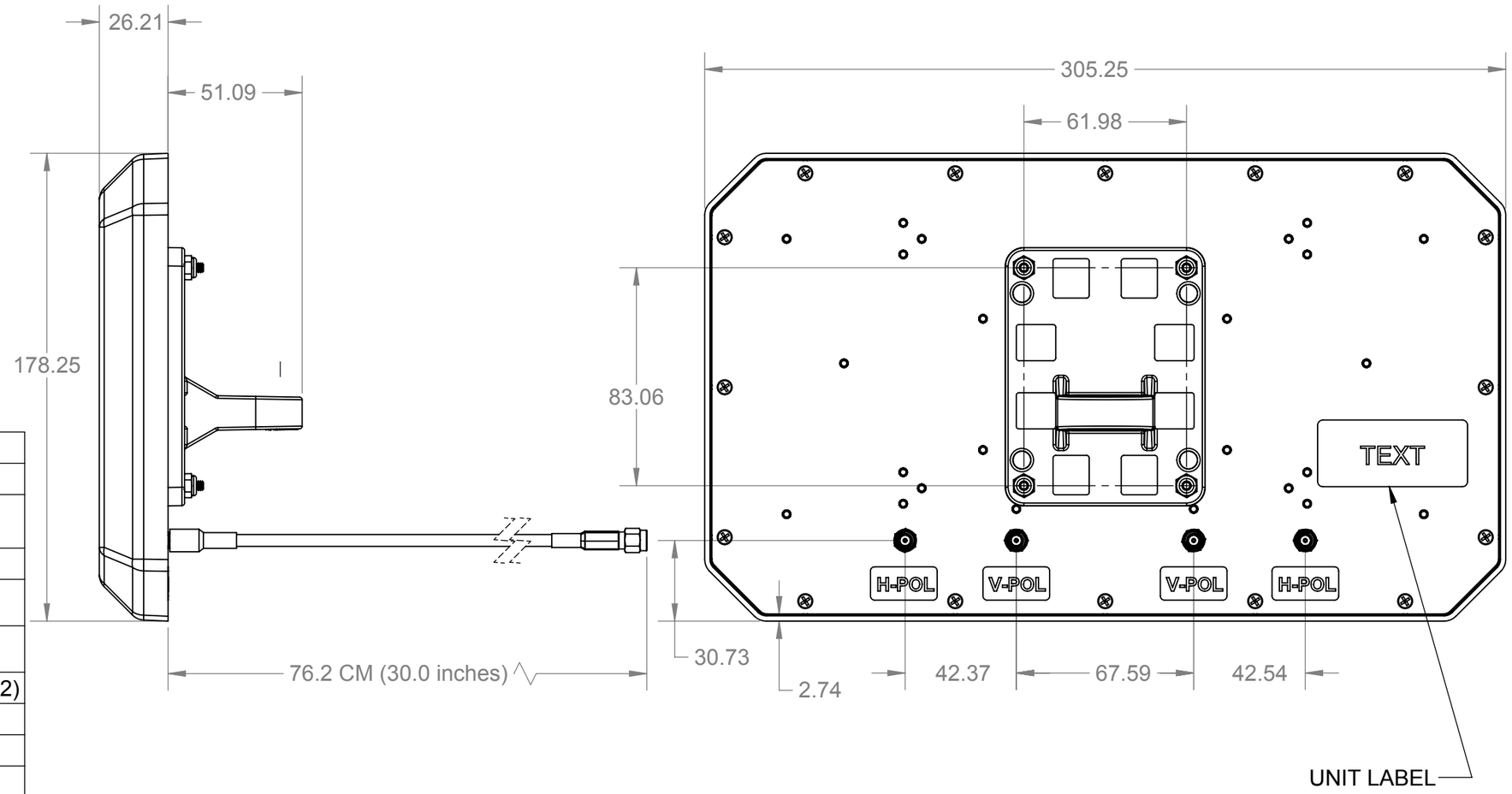

Parameter	Performance	
Model Number	PDM24518-AZ2	
Frequency	2400-2500 MHz	5150-5900 MHz
Peak Gain	8.0 dBi	8.0 dBi
Azimuth Plane 3-dB Beamwidth (Typical)	90~	120~
Elevation Plane 3-dB Beamwidth (Typical)	45~	30~
Polarization	Dual Polarization(H x 2, V X 2)	
F/B Ratio	20 dB	
Impedance	50Ω	
MAX VSWR V-Pole 2400-2500MHz	2.0:1	
MAX VSWR V-Pole 5150-5900MHz	2.2:1	
MAX VSWR H-Pole 2400-2500MHz	2.0:1	
MAX VSWR H-Pole 5150-5900MHz	2.4:1	
Power	10 Watts	
RF Connector	REVERSE SMA MALE	
Cable	76.2 cm (30.0") RG58 STYLE	
Radome	MATERIAL: WHITE POLYCARBONATE	
Operating Temperature	-30 C to +70 C	
Storage Temperature	-40 C to +85C	
Antenna Weight	0.69 kg	

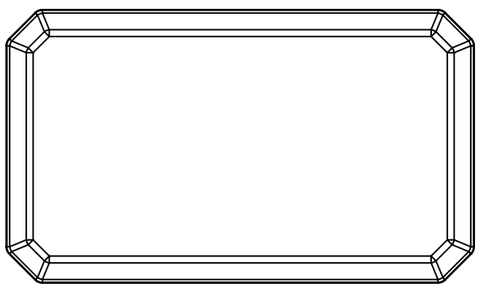

SCALE: 1:4

UNLESS OTHERWISE NOTED, THIS DOCUMENT CONTAINS LAIRD TECHNOLOGIES CONFIDENTIAL INFORMATION. REPRODUCTION, USE, DISCLOSURE OR TRANSMITTAL OF ALL OR ANY PART OF THIS DOCUMENT IS PROHIBITED EXCEPT TO THE EXTENT APPROVED IN WRITING BY AN AUTHORIZED REPRESENTATIVE OF LAIRD TECHNOLOGIES. LAIRD TECHNOLOGIES RESERVES ALL RIGHTS UNDER PATENTS, TRADEMARKS, COPY RIGHTS AND TRADE SECRETS. COPYRIGHT, LAIRD TECHNOLOGIES 2014, ALL RIGHTS RESERVED.

MATERIAL:

FINISH: N/A

APPROVALS		DATE
DRAWN BY	M.LABONVILLE	19JUN18
ELEC. ENG.		
MECH. ENG.	E.RUSSELL	19JUN18
MFG./OPS.	B.THATCHER	19JUN18

THIRD ANGLE PROJECTION

DO NOT SCALE DRAWING

INTERPRET DIMENSIONING AND TOLERANCING IN ACCORDANCE WITH ASME Y14.5M-2009

TOLERANCES UNLESS OTHERWISE SPECIFIED

DIMENSIONS ARE IN MILLIMETERS

ANGLE:	±30'
0 PLACE DECIMAL:	±0.5
1 PLACE DECIMAL:	±0.25
2 PLACE DECIMAL:	±0.13

SURFACE ROUGHNESS 1.6

Laird

MANCHESTER, NH 03103 USA

TITLE: PDM24518-AZ2 AMAZON MOUNITNG & OUITLINE

SIZE	DWG. NO.	REV
A3	PDM24518-AZ2MO	F01

SCALE: 1:1 | PREVIOUS# | SHEET 1 OF 1